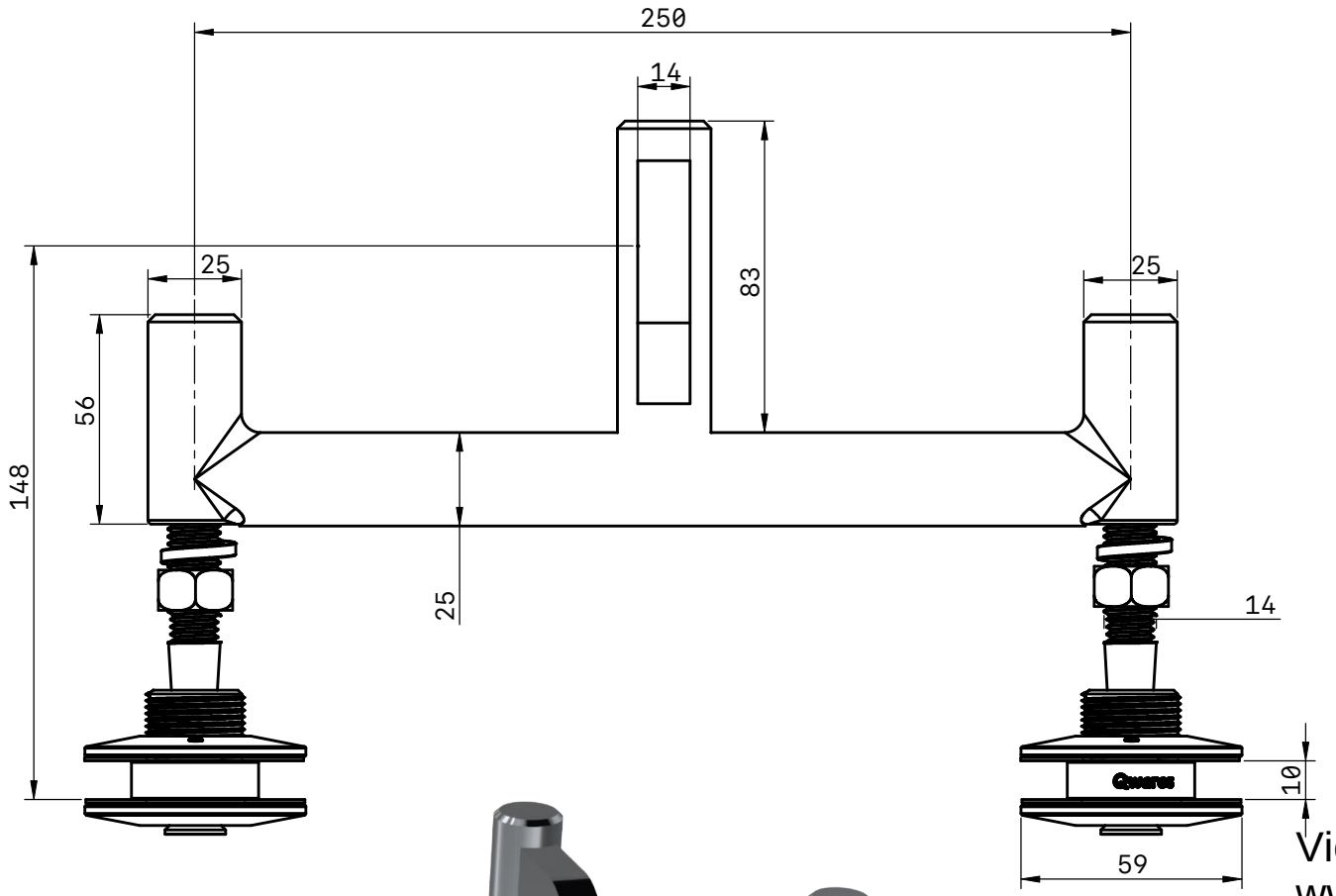

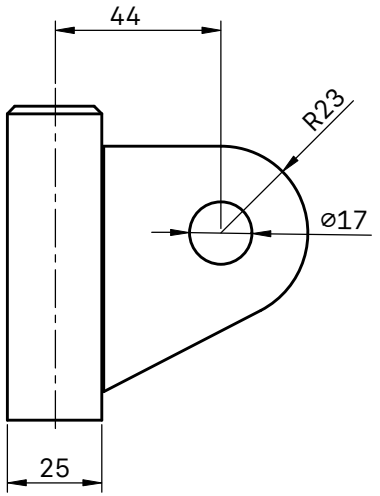

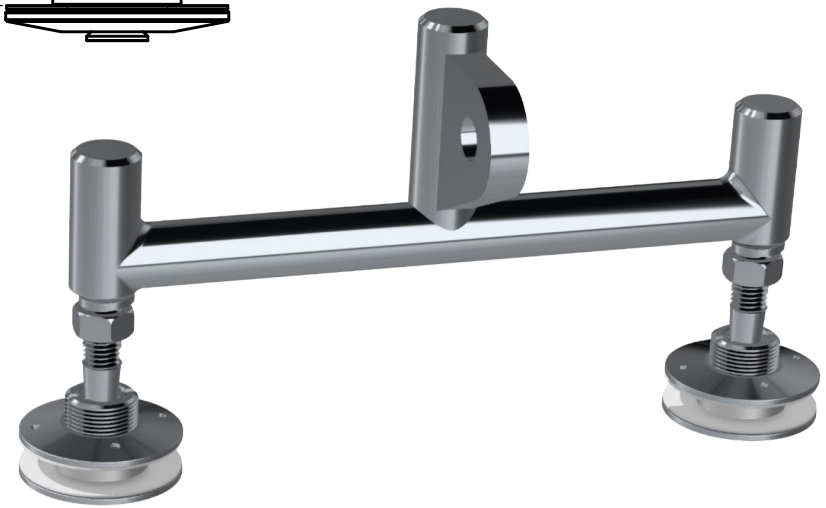

View more at
www.qwares.com/glass/canopy

Mail: info@qwares.com

TITLE		
glass canopy awning fittings YP22		
LAST UPDATED 2022-09-22	UNITS	SHEET
FIRST ANGLE PROJECTION	SCALE	SIZE A4